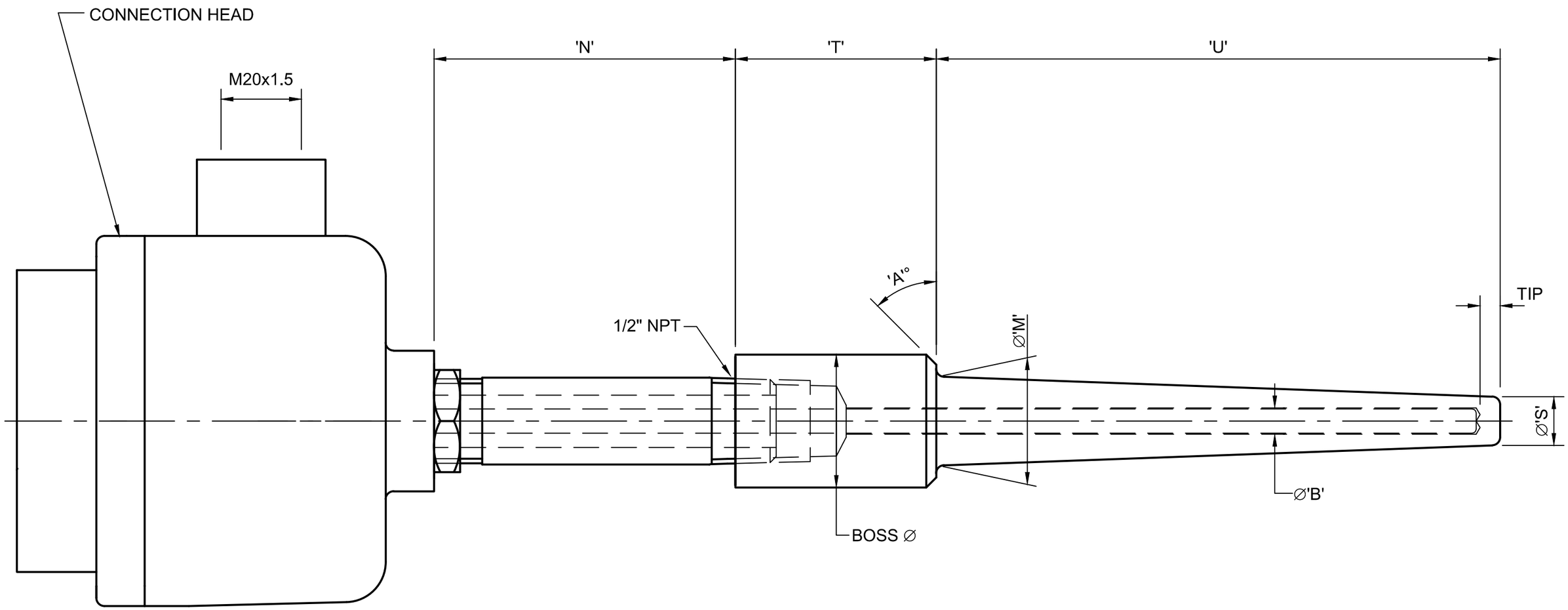

H&B Sensors Ltd
Odyssey House | Durban Road | Bognor Regis | West Sussex | PO22 9RH | UK

t: +44 [0]1243 866866
e: info@hbsensors.com
w: www.hbsensors.com

Description

Thermocouple Sensor With SD Weld In Thermowell

Drawing Number

TWA101

H&B SENSORS

TWA101 – Thermocouple Sensor with Solid Drilled Weld In Thermowell

	TWA101
Sensor Configuration	
Simplex	**S**
Duplex	**D**
Triplex	**T**
Sensor Type	
Type E	**E**
Type J	**J**
Type K	**K**
Type N	**N**
Type T	**T**
Sensor Junction	
Isolated	**I**
Grounded	**G**
Exposed	**E**
Sheath Material	
310 Stainless Steel	**310**
316 Stainless Steel	**316**
Alloy 600	**600**
Approvals	
ATEX/IECEx Exia II 1 GD	**IA**
ATEX/IECEx Exd II 2 GD	**XD**
None	**X**
Connection Head	
Type 11 (Aluminium)	**11**
Type 16 (Aluminium)	**16**
Type 44 (316 Stainless Steel)	**44**
Type 46W (Plastic)	**46W**
Type 55/A (Aluminium)	**55A**
Type 55/S (316 Stainless Steel)	**55S**
Termination	
150mm Tails	**TA**
Ceramic Terminal Block	**TB**
HBS4200 Temperature Transmitter	**42**
HBS4400 Temperature Transmitter (Exia)	**44**
HBS4600 Temperature Transmitter (Exia, HART)	**46**
HBS5500 Temperature Transmitter & Indicator (HART)	**55**
HBS5600 Temperature Transmitter & Indicator (Exia, HART)	**56**
Indicator	
HBS3300	**33**
HBS3700 (Battery Powered)	**37**
HBS5500 Temperature Transmitter & Indicator (HART)	**55**
HBS5600 Temperature Transmitter & Indicator (Exia, HART)	**56**
None	**X**
Extension	
Nipple & Locknut	**NL**
Nipple Union Nipple	**NU**
None	**X**
Extension Length (N)	
50mm	**50**
75mm	**75**
100mm	**100**
150mm	**150**
Xmm	**X**
None	**X**
Boss Ø	
Xmm	**X**
Chamfer Angle (A°)	
45°	**45**
X°	**X**
Immersion Length (U)	

Xmm	**X**
Root Ø (M)	
Xmm	**X**
Tip Ø (S)	
Xmm	**X**
Tip Thickness	
5mm	**5**
Xmm	**X**
Lagging (T)	
50mm	**50**
Xmm	**X**
Material	
304/304L Stainless Steel	**304**
310 Stainless Steel	**310**
316/316L Stainless Steel	**316**
Alloy C276	**276**
Alloy 400	**400**
Alloy 600	**600**
Alloy 601	**601**
Alloy 625	**625**
Alloy 800	**800**

Example Ordering Code:

TWA101-S-K-I-316-X-11-42-X-NL-75-25.4-45-150-16-12.5-5-50-316